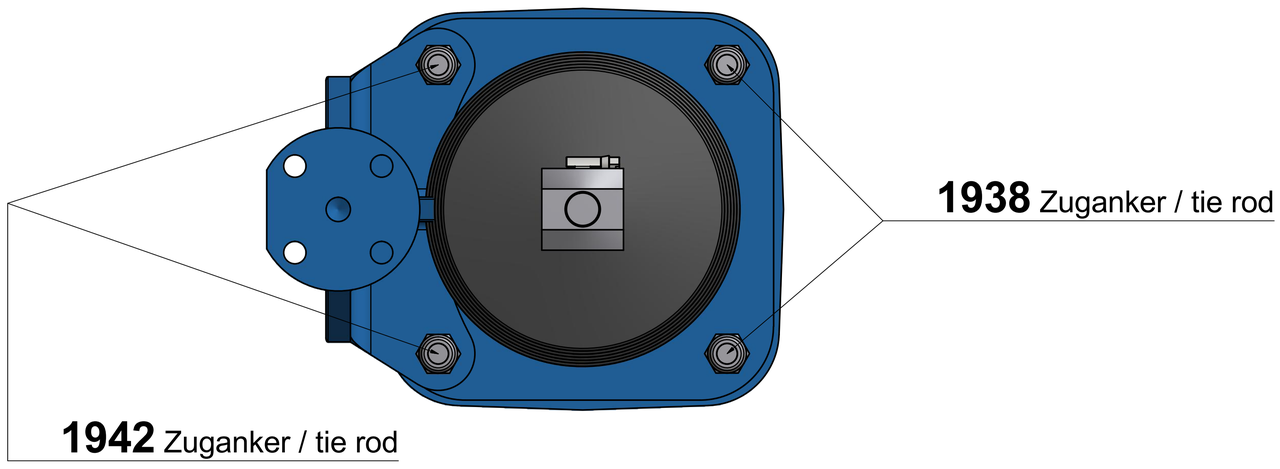

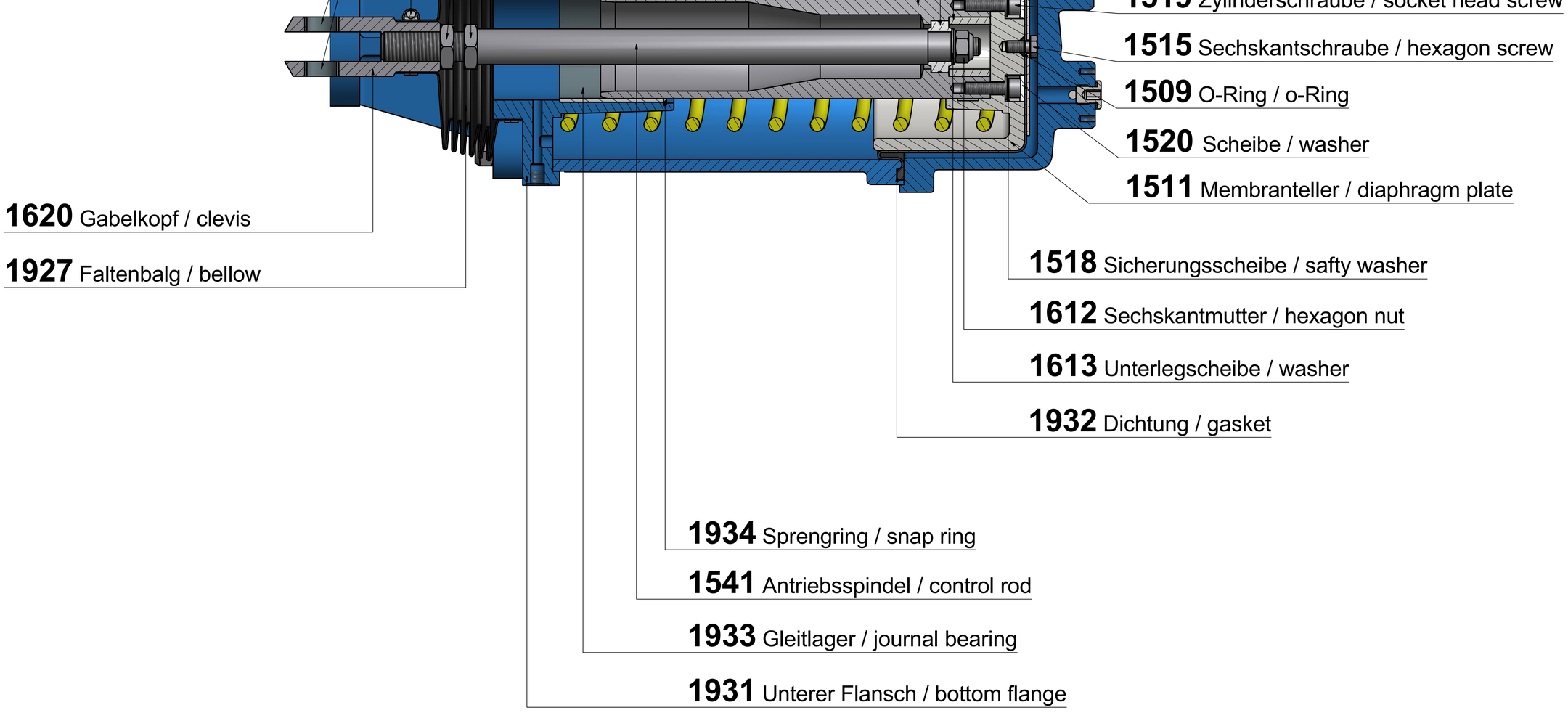

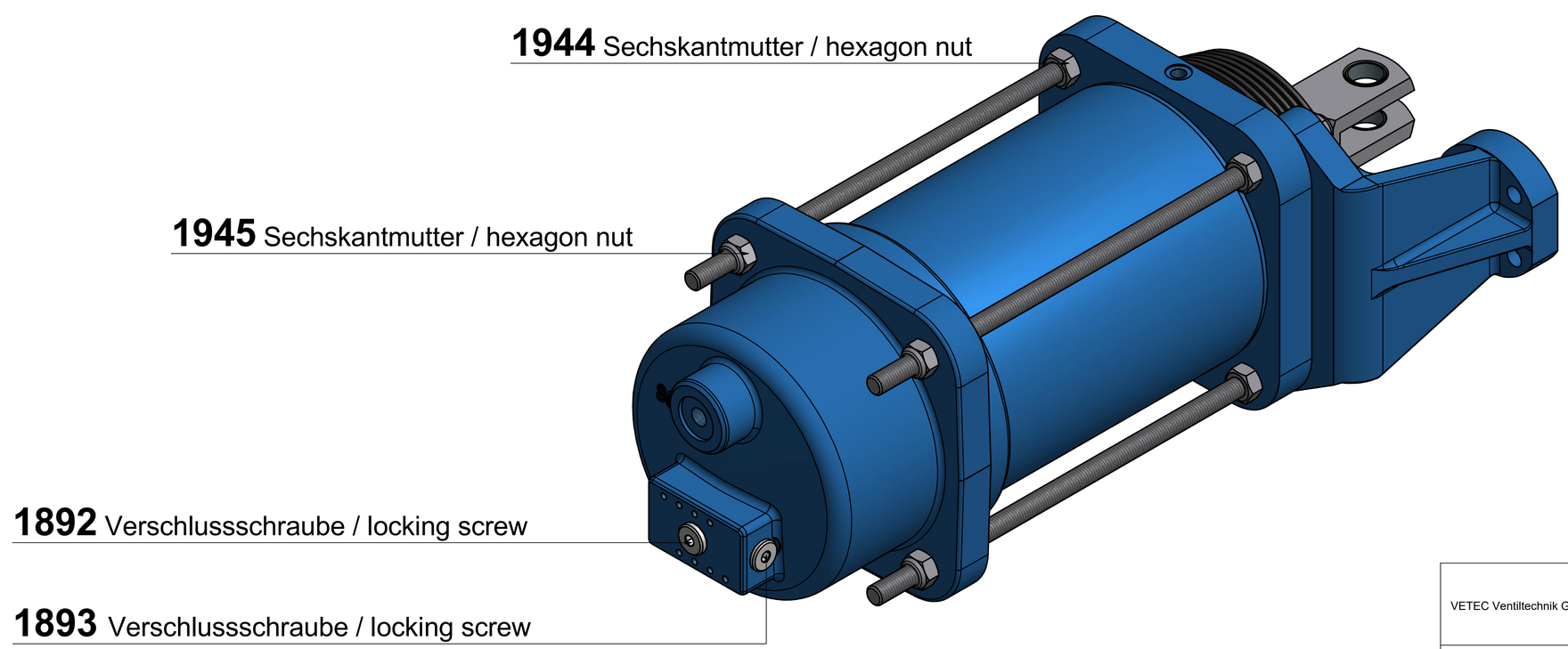

VETEC Ventiltechnik Gmbh	SAMSON
ET019.004 / 14797	
R150/R150v	
Revision 1	