DATA SHEET

T 8384-6 EN

Type 3730-6 Electropneumatic Positioner

with HART® communication and pressure sensors · Series 3730

Ex certified

Application

Single-acting or double-acting positioner for attachment to pneumatic control valves. Self-calibrating, automatic adaptation to valve and actuator.

Set point	**4 to 20 mA**
Valve travel	**3.6 to 300 mm**
Opening angle	**24 to 100°**

The positioner ensures a predetermined assignment of the valve position (controlled variable x) to the input signal (set point w). It compares the input signal received from a control system to the travel or rotational angle of the control valve and issues a corresponding output signal pressure (output variable y).

Special features

- Simple attachment to all common linear and rotary actuators
  - SAMSON direct attachment (Fig. 1)
  - NAMUR rib (Fig. 2)
  - Attachment to rod-type yokes according to IEC 60534-6-1
  - Attachment according to VDI/VDE 3847
  - Rotary actuator attachment according to VDI/VDE 3845 (Fig. 3)
- Any desired mounting position of the positioner (but not suspended)
- Simple one-knob, menu-driven operation
- LCD easy to read in any mounting position thanks to selectable reading direction
- Configurable with a computer over the SSP interface using the TROVIS-VIEW software
- Variable, automatic start-up with four different initialization modes
- Preset parameters - only values deviating from the standard need to be adjusted
- Calibrated travel sensor without gears susceptible to wear
- Sub (substitution) initialization mode allows the positioner to be started up in case of emergency whilst the plant is running without having to change the valve position.
- All parameters saved in non-volatile EEPROM
- Two-wire system with a small electrical load of 460 Ω
- Adjustable output pressure limitation

Fig. 1: *Type 3730-6, direct attachment to Type 3277 Pneumatic Actuator (new design)*

Fig. 2: *Type 3730-6 Attachment according to VDI/VDE 3845*

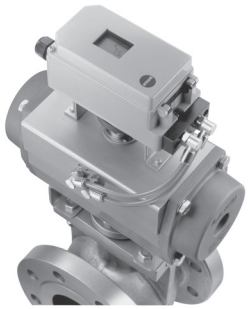

Fig. 3: *Type 3730-6 Attachment according to NAMUR*

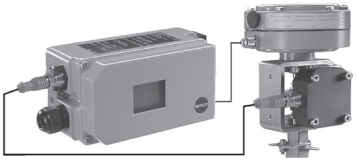

Fig. 4: *Type 3730-6 External position sensor with Type 3510 Micro-flow Valve*

- Adjustable tight-closing function
- Continuous zero monitoring
- Integrated temperature sensor and operating hours counter
- Two programmable position alarms as standard
- Self-diagnostics; messages as condensed state conforming to NAMUR Recommendation NE 107, issued over a fault alarm contact or optional analog position transmitter

- Integrated EXPERTplus diagnostics for control valves (▶ T 8389-1)
- Pressure sensors to monitor the supply air and signal pressure

Version

– **Type 3730-6** · Electropneumatic positioner for control valves, HART® communication, on-site operation, local communication with SSP interface, EXPERTplus diagnostics, pressure sensors to monitor the supply air and signal pressure
– **Type 3730-3** · Electropneumatic positioner same as Type 3730-6, without pressure sensors (see ▶ T 8384-3)

Additional options

– Inductive limit switch with proximity switches
– Analog position transmitter with two-wire transmitter
– Electronically activated forced venting function
– Solenoid valve with parallel forced venting
– Binary input
– External position sensor (Fig. 4)
– Stainless steel housing
– Leakage sensor to monitor the seat leakage

Principle of operation

The positioner is mounted on pneumatic control valves and used to assign the valve position (controlled variable x) to the control signal (set point w). The positioner compares the electric control signal of a control system to the travel or rotational angle of the control valve and issues a signal pressure (output variable y) for the pneumatic actuator.

The positioner mainly consists of an electric travel sensor system (2), an analog i/p module with a downstream air booster and the electronics with the microcontroller (5).

When a set point deviation occurs, the actuator is either vented or filled with air. If necessary, the signal pressure change can be slowed down with a volume restriction that can be connected as necessary. The signal pressure to the actuator can be limited by software to 1.4, 2.4 or 3.7 bar.

A constant air stream with a fixed set point to the atmosphere is created by flow regulator (9) with a fixed set point. The i/p module (6) is supplied with a constant upstream pressure by the pressure reducer (8) to make it independent of the supply air pressure.

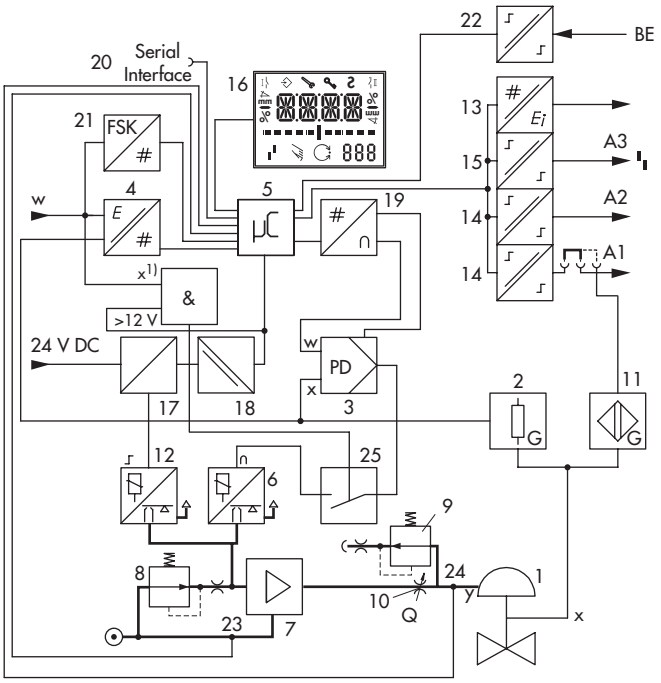

1 Control valve
2 Travel sensor
3 PD controller
4 A/D converter
5 Microcontroller
6 i/p converter
7 Air booster
8 Pressure reducer
9 Flow regulator
10 Volume restriction
11 Inductive limit switch (option)
12 Solenoid valve (option)
13 Analog position transmitter or binary input (optional)
14 Software limit switches A1/A2
15 Fault alarm output A3
16 Display
17 Actuation of solenoid valve (optional)
19 D/A converter
20 Communication interface
21 HART® connection
22 Binary input BE (option)
23 Pressure sensor for supply air p_s
24 Pressure sensor for signal pressure p_{out}
25 Forced venting (optional)

Fig. 5: *Functional diagram of Type 3730-6 Positioner*

Table 1: *Technical data*

Type 3730-6 Positioner (technical data in test certificates additionally apply to explosion-protected devices)		
Valve travel	Adjustable	Direct attachment to Type 3277 Actuator: 3.6 to 30 mm Attachment according to IEC 60534-6 (NAMUR): 3.6 to 300 mm Attachment according to VDI/VDE 3847: 3.6 to 300 mm Attachment to rotary actuators (VDI/VDE 3845): 24 to 100° opening angle
Travel range	Adjustable	Adjustable within the initialized travel/angle of rotation of the valve; travel can be restricted to ⅕ at the maximum.
Set point w	Signal range	4 to 20 mA · Two-wire device, reverse polarity protection · Minimum span 4 mA
	Static destruction limit	30 V
Minimum current		3.6 mA for display · Emergency venting at ≤3.8 mA or ≤4.4 mA depending on version
Load impedance		≤9.2 V (corresponding to 460 Ω at 20 mA)
Supply	Supply air	1.4 to 7 bar (20 to 105 psi)
	Air quality acc. to ISO 8573-1 (edition 2001-02)	Maximum particle size and density: Class 4 · Oil content: Class 3 Pressure dew point: Class 3 or at least 10 K below the lowest ambient temperature to be expected
Signal pressure (output)		0 bar up to the supply pressure · Can be limited between 1.4 and 7.0 bar by software
Characteristic	Adjustable	Linear/Equal percentage/Reverse equal percentage User-defined (over operator software) Butterfly valve, rotary plug valve and segmented ball valve: Linear/equal percentage
	Deviation	≤1 %
Hysteresis		≤0.3 %
Sensitivity		≤0.1 %
Transit time		Exhaust and supply adjustable separately up to 240 s by software
Direction of action		Reversible
Air consumption, steady state		Independent of supply air approx. 110 l_n/h
Air output capacity	Actuator (supply)	At Δp = 6 bar: 8.5 m_n^3/h · At Δp = 1.4 bar: 3.0 m_n^3/h · $K_{Vmax(20\,°C)}$ = 0.09
	Actuator (exhaust)	At Δp = 6 bar: 14.0 m_n^3/h · At Δp = 1.4 bar: 4.5 m_n^3/h · $K_{Vmax\,(20\,°C)}$ = 0.15
Permissible ambient temperature		−20 to +80 °C (all versions) −45 to +80 °C with metal cable gland The limits in the type examination certificate additionally apply to explosion-protected versions.
Influences	Temperature	≤0.15 %/10 K
	Supply air	None
	Effect of vibration	≤0.25 % up to 2000 Hz and 4 g according to IEC 770
Electromagnetic compatibility		Complying with EN 61000-6-2, EN 61000-6-3, EN 61326-1 and NAMUR Recommendation NE 21
Electrical connections		One M20x1.5 cable gland for 6 to 12 mm clamping range · Second M20x1.5 threaded connection additionally exists · Screw terminals for 0.2 to 2.5 mm² wire cross-sections
Degree of protection		IP 66/NEMA 4X
Certified according to IEC 61508/SIL		Suitable for use in safety-instrumented systems up to SIL 2 (single device/HFT = 0) and SIL 3 (redundant configuration/HFT = 1) according to IEC 61511. • Triggered by the set point, emergency venting depending on positioner version at ≤3.8 mA or ≤4.4 mA • By the optional solenoid valve, emergency venting at 0 V • By the optional forced venting function, emergency venting at <12 V
Communication (local)		SAMSON SSP interface and serial interface adapter, software requirements (SSP): TROVIS-VIEW with database module 3730-6
Communication (HART®)		HART® field communication protocol Impedance in HART® frequency range: Receiving 350 to 450 Ω · Sending approx. 115 Ω
Software requirements (HART®)	For handheld communicator	Device description for Type 3730-6
	For computer	DTM file according to specification 1.2, suitable for integrating the device into frame applications that support the use of FDT/DTM (e.g. PACTware)
Conformity		CE · EAC

Explosion protection		
ATEX, IECEx, ...		See table for explosion protection certificates
Binary contacts		
Two software limit switches, reverse polarity protection, floating, configurable switching characteristics (default settings in table below)		
Signal state	No response	≤1.0 mA
	Response	≥2.2 mA
One fault alarm contact, floating		
Signal state	No response/no fault	≥2.2 mA
	Response/fault alarm	≤1.0 mA
For connection to		NAMUR switching amplifier acc. to EN 60947-5-6
Materials		
Housing		Die-cast aluminum EN AC-AlSi12(Fe) (EN AC-44300) acc. to DIN EN 1706, chromate and powder coating · Special version: stainless steel 1.4408
External parts		Stainless steel 1.4404/316L
Cable gland		M20x1.5, black polyamide
Weight		Approx. 1.0 kg · Stainless steel version: 2.2 kg

Table 2: *Options for Type 3730-6 Positioner*

Electronic forced venting · Approval acc. to IEC 61508/SIL	
Input	24 V DC · Electrical isolation and reverse polarity protection · Static destruction limit 40 V Power draw: $I = \frac{U - 5.7\ V}{3.84\ k\Omega}$ (corresponding to 4.8 mA at 24 V/114 mW)
Signal '0' (no response)	<12 V (emergency venting at 12 V)
Signal '1' (response)	> 19 V
Solenoid valve · Approval acc. to IEC 61508/SIL	
Input	24 V DC · Reverse polarity protection · Static destruction limit 40 V Power draw: $I = \frac{U - 5.7\ V}{3.84\ k\Omega}$ (corresponding to 4.8 mA at 24 V/114 mW)
Signal '0' (no response)	<12 V (emergency venting at 0 V)
Signal '1' (response)	> 19 V
Service life	> 5 x 10^6 switching cycles
Analog position transmitter	Two-wire transmitter · Galvanically isolated
Power supply	12 to 30 V DC · Reverse polarity protection · Static destruction limit 40 V
Output signal	4 to 20 mA
Operating direction	Reversible
Operating range	−10 to +114 %
Characteristic	Linear
Hysteresis	Same as positioner
High-frequency influence	Same as positioner
Other influences	Same as positioner
Fault alarm	Can be issued as current signal 2.4 ±0.1 mA or 21.6 ±0.1 mA
Leakage sensor · Suitable for operation in hazardous areas	
Temperature range	−40 to +130 °C
Tightening torque	20 ±5 Nm
Inductive limit switch by Pepperl+-Fuchs	For connection to switching amplifier acc. to EN 60947-5-6, Can be used in combination with a software limit switch.
SJ2-SN proximity switch	Measuring plate not detected: ≥3 mA · Measuring plate detected: ≤1 mA

External position sensor		
Valve travel		Same as positioner
Cable		10 m · Flexible and durable · With M12x1 connector · Flame-retardant according to VDE 0472 · Resistant to oils, lubricants and coolants as well as other aggressive media
Permissible ambient temperature		–40 to +90 °C with a fixed connection between positioner and position sensor · The limits in the test certificate additionally apply for explosion-protected versions.
Immunity to vibration		Up to 10 g in the range of 10 to 2000 Hz
Degree of protection		IP 67
Binary input · Galvanic isolation · Switching behavior configured by software		
Active switching behavior (default setting)		
Port		For external switch (floating contact) or relay contact
Electric data		Open-circuit voltage when contact is open: max. 10 V Pulsed DC current reaching peak value of 100 mA and RMS value of 0.01 mA when contact is closed
Contact	Closed, R < 20 Ω	ON switching state (default setting)
	Open, R > 400 Ω	OFF switching state (default setting)
Passive switching behavior		
Port		For externally applied DC voltage, reverse polarity protection
Electric data		3 to 30 V · Static destruction limit 40 V · Current consumption at 24 V: 3.7 mA
Voltage	>6 V	ON switching state (default setting)
	<1 V	OFF switching state (default setting)

Summary of explosion protection certificates for Type 3730-6 Positioner

Typ 3730-6	Certification			Type of protection
-110	**ATEX**	Number	PTB 10 ATEX 2007	II 2 G Ex ia IIC T6 Gb II 2 D Ex ia IIIC T80 °C Db
		Date	2020-01-20	
-210		Number	PTB 10 ATEX 2007	II 2 G Ex d[ia] IIC T6 Gb II 2 D Ex tb IIIC T80 °C Db
		Date	2020-01-20	
-510		Number	PTB 10 ATEX 2007	II 2 D Ex tb IIIC T80 °C Db
		Date	2020-01-20	
-810		Number	PTB 10 ATEX 2008X	II 3 G Ex nA ic IIC T6 Gc II 3 D Ex tc IIIC T80°C Dc IP66
		Date	2010-08-18	
-131	**CSA**	Number	2682094	Ex ia IIC T4/T5/T6; Class I, Zone 0 Class I, Groups A,B,C,and D Class II Groups E,F and G; Class III; Type 4 Enclosure
		Date	2017-05-24	
-112	**CCC Ex**	Number	2020322307003192	Ex ia IIC T4...T6 Gb Ex ia IIIC T80°C Db
		Date	2023-04-29	
		Valid until	2025-11-08	
-512		Number	2020322307003192	Ex tb IIIC T80°C Db
		Date	2023-04-29	
		Valid until	2025-11-08	
-130	**FM**	Number	3012394	Intrinsically safe: IS, Class I, II, III, Div. 1, Gr. A, B, C, D, E, F, G AEx ia IIC / Class I / Zone 0 Non incendive: NI, Class I, Div. 2, Gr. A, B, C, D S, Class II, Div. 2, Gr. F, G Enclosure Type 4X
		Date	2014-11-05	
-111	**IECEx**	Number	IECEx PTB 10.0057	Ex ia IIIC T80 °C Db Ex ia IIC T6 Gb
		Date	2020-09-17	
-211		Number	IECEx PTB 10.0057	Ex db[ia] IIC T6 Gb Ex tb IIIC T80 °C Db
		Date	2020-09-17	
-511		Number	IECEx PTB 10.0057	Ex tb IIIC T80°C Db
		Date	2020-09-17	
-811		Number	IECEx PTB 10.0058X	Ex nA IIC T6 Ex nL IIC T6 Ex tD A22 IP 66 T80 °C
		Date	2010-12-10	
-116	**TR CMU 1055**	Number	ZETC/35/2021	II 2G Ex ia IIC T6 Gb II 2D Ex ia IIIC T80 °C Db
		Date	2021-07-26	
		Valid until	2024-07-25	
-516		Number	ZETC/35/2021	II 2D Ex tb IIIC T80°C Db
		Date	2021-07-26	
		Valid until	2024-07-25	
-816		Number	ZETC/35/2021	II 3G Ex nA IIC T6 Gc II 3D Ex tc IIIC T80°C Dc
		Date	2021-07-26	
		Valid until	2024-07-25	

Operation

The positioner is operated with a user-friendly rotary pushbutton. The parameters are selected by turning the knob, pushing it activates the required setting. In the menu, all parameters are listed in one level, eliminating the need to search in submenus. All parameters can be checked and changed on site.

All values are displayed on the LCD. The reading direction of the LCD can be rotated by 180°.

The closing direction of the control valve is indicated to the positioner by setting the slide switch "Air to open/Air to close". It assigns the CLOSED position of the control valve to the 0 % reading.

The INIT key activates initialization which is started according to the ready adjusted parameters (autotune). After initialization is completed, the positioner immediately starts closed-loop operation.

To configure the positioner with SAMSON's TROVIS-VIEW software, the positioner is equipped with an additional digital interface to be connected to the RS-232 or USB interface of a computer.

Additionally, all parameters of the Type 3730-6 Positioner can be accessed using HART® communication.

Mounting the positioner

The Type 3730 Electropneumatic Positioner can be attached directly to the Type 3277 Actuator (175 to 750 cm²) over a connection block. In actuators with "actuator stem extends" fail-safe action, the signal pressure is routed over an internal hole in the actuator yoke to the actuator. In actuators with "actuator stem retracts" fail-safe action, the signal pressure is routed to the actuator over ready-made external piping.

Using the appropriate bracket, the positioner can also be attached according to IEC 60534-6-1 (NAMUR recommendation). The positioner can be mounted on either side of the control valve.

A pair of universal brackets is used for the attachment to Type 3278 Rotary Actuators or other rotary actuators according to VDI/VDE 3845. The rotary motion of the actuator is transferred to the positioner over a coupling wheel with travel indication.

A special version of the positioner allows it to be attached according to VDI/VDE 3847. This type of attachment allows the positioner to be replaced quickly while the process is running by blocking the air in the actuator. The positioner can be attached directly to the Type 3277 Actuator using an adapter bracket or adapter block. Alternatively, it can be attached to the NAMUR rib of a control valve using an additional NAMUR connection block.

A reversing amplifier is necessary for double-acting, springless actuators for the second opposing signal pressure.

Dimensions in mm

Direct attachment

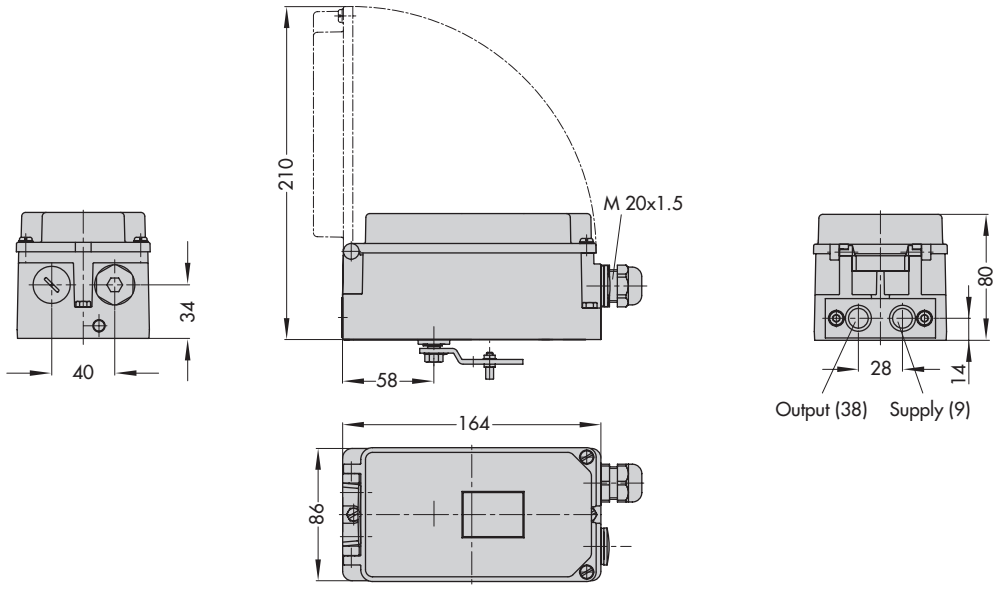

NAMUR attachment

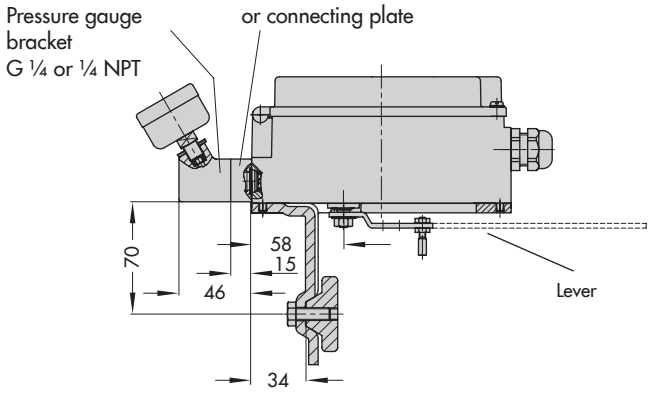

Attachment according to VDI/VDE 3847

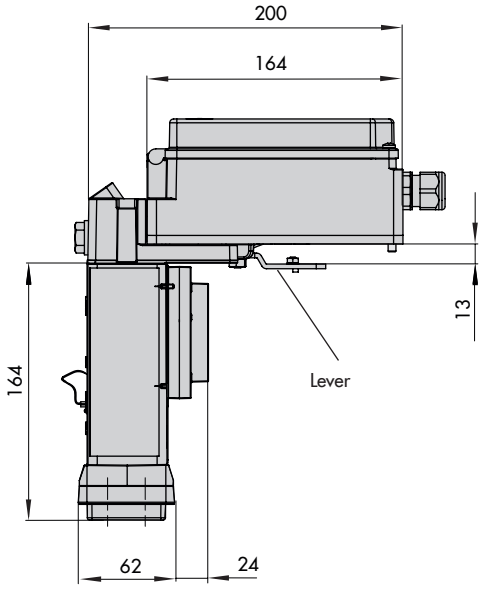

Attachment to SAMSON
Type 3277

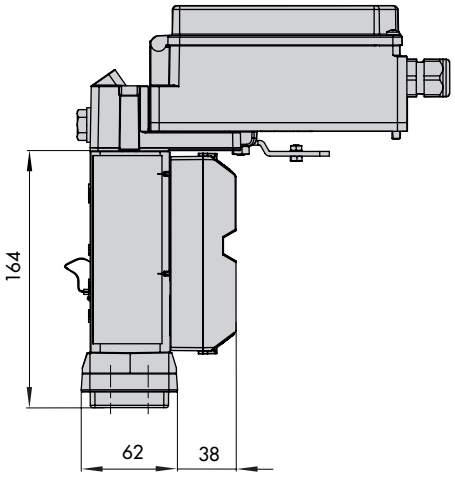

Attachment to NAMUR rib

External position sensor

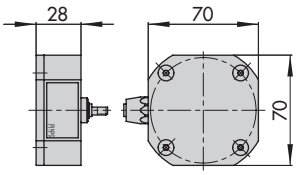

Attachment to rotary actuators

VDI/VDE 3845 (Sept. 2010)
Fixing level 1
Size AA1 to AA4

Light version

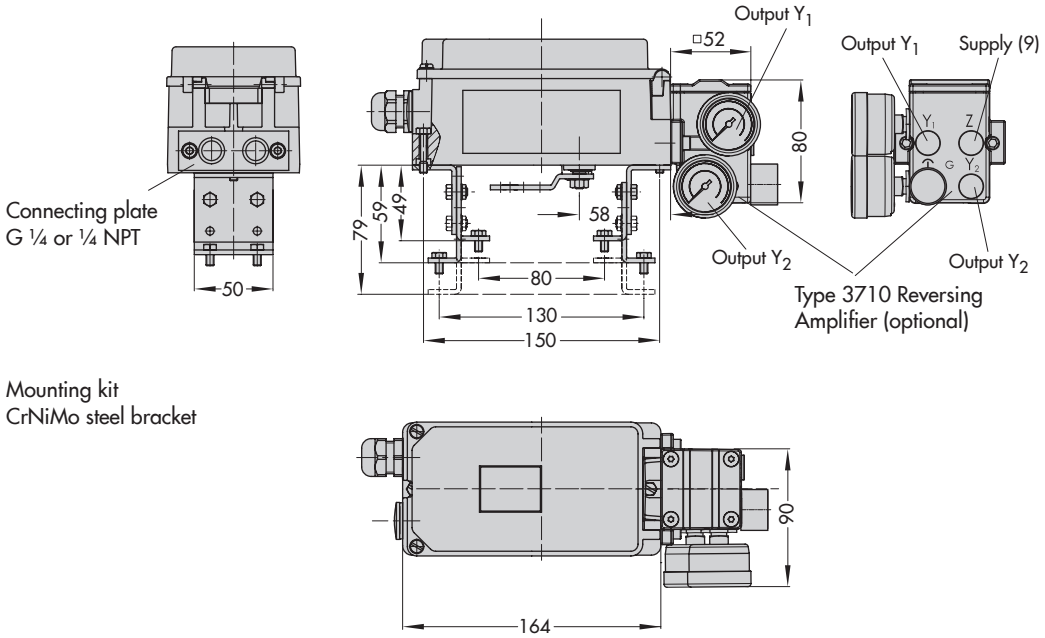

Heavy-duty version

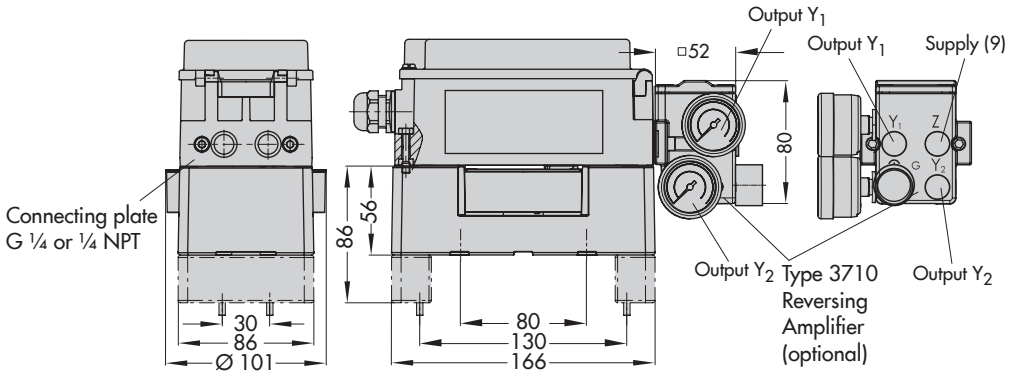

Lever

Lever	x	y	z
S	17 mm	25 mm	33 mm
M	25 mm	50 mm	66 mm
L	70 mm	100 mm	116 mm
XL	100 mm	200 mm	216 mm

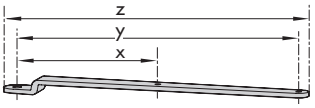

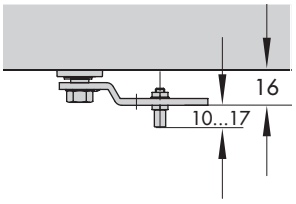

Ordering text

Type 3730-6... Positioner

- Without pneumatic connecting rail
  (only when directly attached to Type 3277)
- With pneumatic connecting rail ISO 228/1-G ¼
- With pneumatic connecting rail ¼-18 NPT
- Without/with pressure gauge up to max. 6 bar
- Attachment to Type 3277 Actuator (175 to 750 cm^2)
- Attachment acc. to IEC 60534-6-1 (NAMUR)
  Valve travel: ... mm, if applicable, stem diameter: ... mm
- Attachment acc. to VDI/VDE 3847
  Valve travel: ... mm, if applicable, stem diameter: ... mm
- Attachment to Type 3278 Rotary Actuator (160/320 cm^2), mounting kit with CrNiMo steel bracket or heavy-duty attachment
- Attachment to rotary actuators acc. to VDI/VDE 3845, mounting kit with CrNiMo steel bracket or heavy-duty attachment
- Pneumatic reversing amplifier for double-acting actuators with connection acc. to ISO 228/1-G ¼ or ¼-18 NPT
- Adapter M20x1.5 to ½ NPT
- Metal cable gland
- Special version: housing made of CrNiMo steel

Article code

Positioner		Type 3730-6	x	x	x	x	x	x	x	0	x	x	0	x	0	0
with HART® communication and pressure sensors																
Explosion protection																
Without			0	0	0											
ATEX	II 2 G Ex ia IIC T6 Gb; II 2 D Ex ia IIIC T80 °C Db	1		1	0											
IECEx	Ex ia IIIC T80 °C Db; Ex ia IIC T6 Gb	1		1	1											
CCC Ex	Ex ia IIC T4...T6 Gb; Ex ia IIIC T80°C Db															
TR CMU 1055	II 2G Ex ia IIC T6 Gb; II 2D Ex ia IIIC T80°C Db	1		1	6											
FM	Intrinsically safe: IS / Class I,II,III / Div. 1 / Gr. ABCDEFG; AEx ia IIC / Class I / Zone 0 Non Incendive: NI / Class I / Div. 2 / Gr. ABCD; S / Class II / Div. 2 / Gr. FG; Enclosure Type 4X	1		3	0											
CSA	Ex ia IIC T4/T5/T6; Class I, Zone 0; Class I, Groups A,B,C,and D; Class II Groups E,F and G; Class III; Type 4 Enclosure	1		3	1											
ATEX	II 2 G Ex d[ia] IIC T6 Gb; II 2 D Ex tb IIIC T80 °C Db	2		1	0											
IECEx	Ex db[ia] IIC T6 Gb; Ex tb IIIC T80 °C Db	2		1	1											
ATEX	II 2 D Ex tb IIIC T80 °C Db	5		1	0											
IECEx	Ex tb IIIC T80°C Db	5		1	1											
CCC Ex	Ex tb IIIC T80°C Db															
TR CMU 1055	II 2D Ex tb IIIC T80°C Db	5		1	6											
ATEX	II 3 G Ex nA ic IIC T6 Gc; II 3 D Ex tc IIIC T80°C Dc IP66	8		1	0											
IECEx	Ex nA IIC T6; Ex nL IIC T6; Ex tD A22 IP66 T80 °C	8		1	1											
TR CMU 1055	II 3G Ex nA IIC T6 Gc; II 3D Ex tc IIIC T80°C Dc	8		1	6											
NEPSI	Ex ic IIC T4~T6 Gc; Ex nA IIC T4~T6 Gc; Ex tD A22 IP66 T80°C		8	1	2											
GOST (EAC)	2Ex nA IIC T6...T4 Gc X; 2Ex ic IIC T6...T4 Gc X; Ex tc IIIC T80°C Dc X		8	1	3											
TR CMU 1055	II 3G Ex nA IIC T6 Gc; II 3D Ex tc IIIC T80°C Dc		8	1	6											
Option (additional equipment)																
Inductive limit switch																
Without						0										
SJ2-SN (NC contact)						1			0							
Venting function																
Without							0									
Solenoid valve, 24 V DC							1									
Forced venting, 24 V DC							2									
Additional equipment																
Without								0								
Position transmitter								1	0							
Leakage sensor (including cable and fixing screw)								2	0							
Binary input								3	0							
External position sensor																
Without									0							
With, including 10 m connecting cable									1			1				
Prepared for connection, without sensor									2							
Function																
Standard (control valves)										0						
Emergency shutdown																
3.8 mA											0					
4.4 mA											1					

Positioner	**Type 3730-6**	**x**	**x**	**x**	**x**	**x**	**x**	**x**	**0**	**x**	**x**	**0**	**x**	**0**	**0**
Housing material															
Aluminum (standard)											1				
Stainless steel											2				
Special applications															
Without													0		
Device compatible with paint													1		
Exhaust air port with ¼-18 NPT thread, back of positioner sealed													2		
With additional vent hole and VDI/VDE 3847 adapter; without travel pick-off parts													6		
With additional vent hole													7		